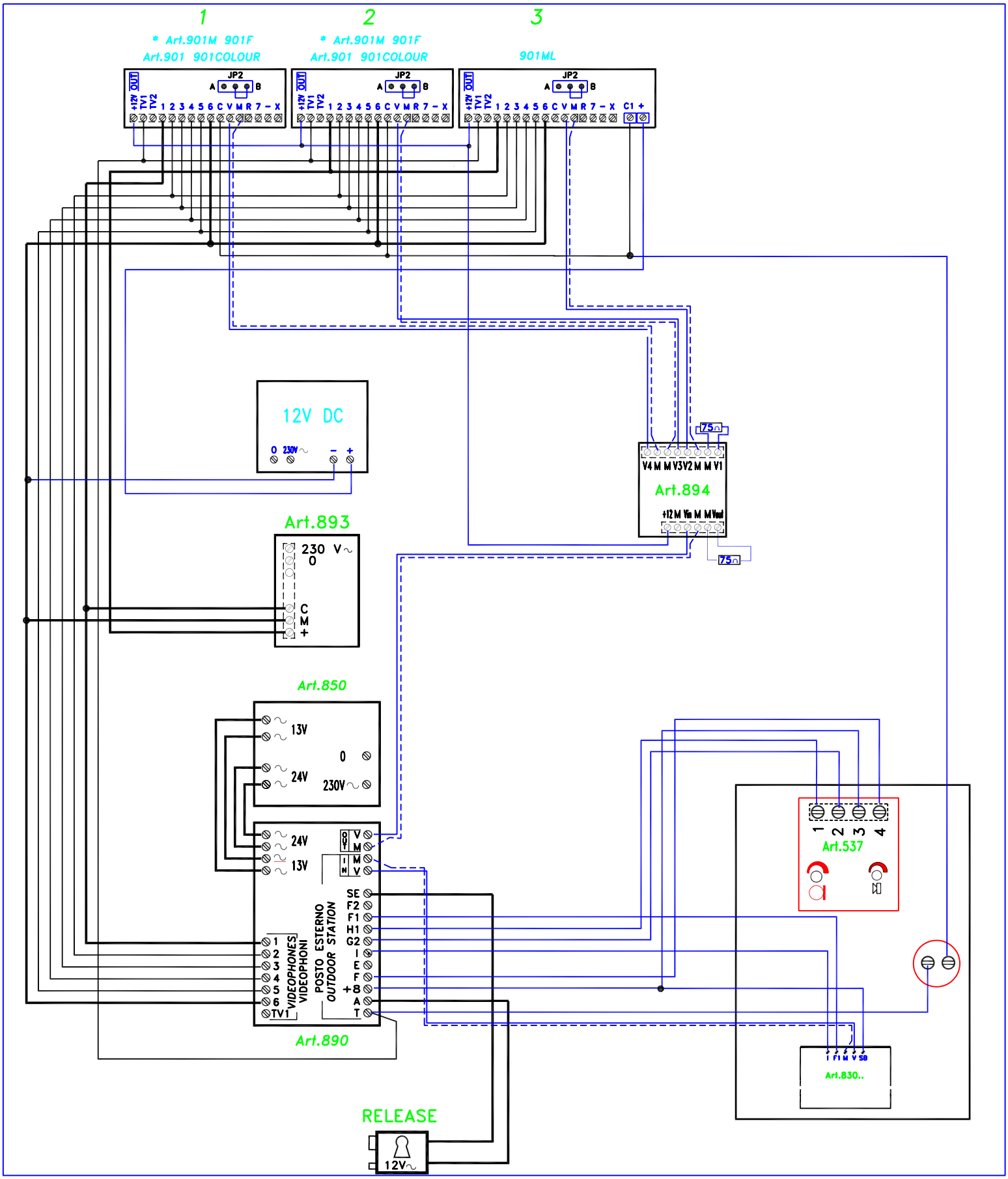
1
* Art.901M 901F
Art.901 901COLOUR
2
* Art.901M 901F
Art.901 901COLOUR
3
901ML
JP2
OUT
+12V TV1 TV2 1 2 3 4 5 6 C V M R 7 – X
C1 +
12V DC
0 230V ~ – +
Art.894
V4 M M V3 V2 M M V1
+12 M Vin M M Vout
75Ω
Art.893
230 V ~
0
C
M
+
Art.850
13V
24V
0
230V ~
Art.890
24V
13V
SE
F2
F1
H1
G2
I
E
F
+8
A
T
1
2
3
4
5
6
TV1
VIDEOPHONES
VIDEOPHONI
POSTO ESTERNO
OUTDOOR STATION
Art.537
1 2 3 4
Art.830..
I F1 M V SB
RELEASE
12V~