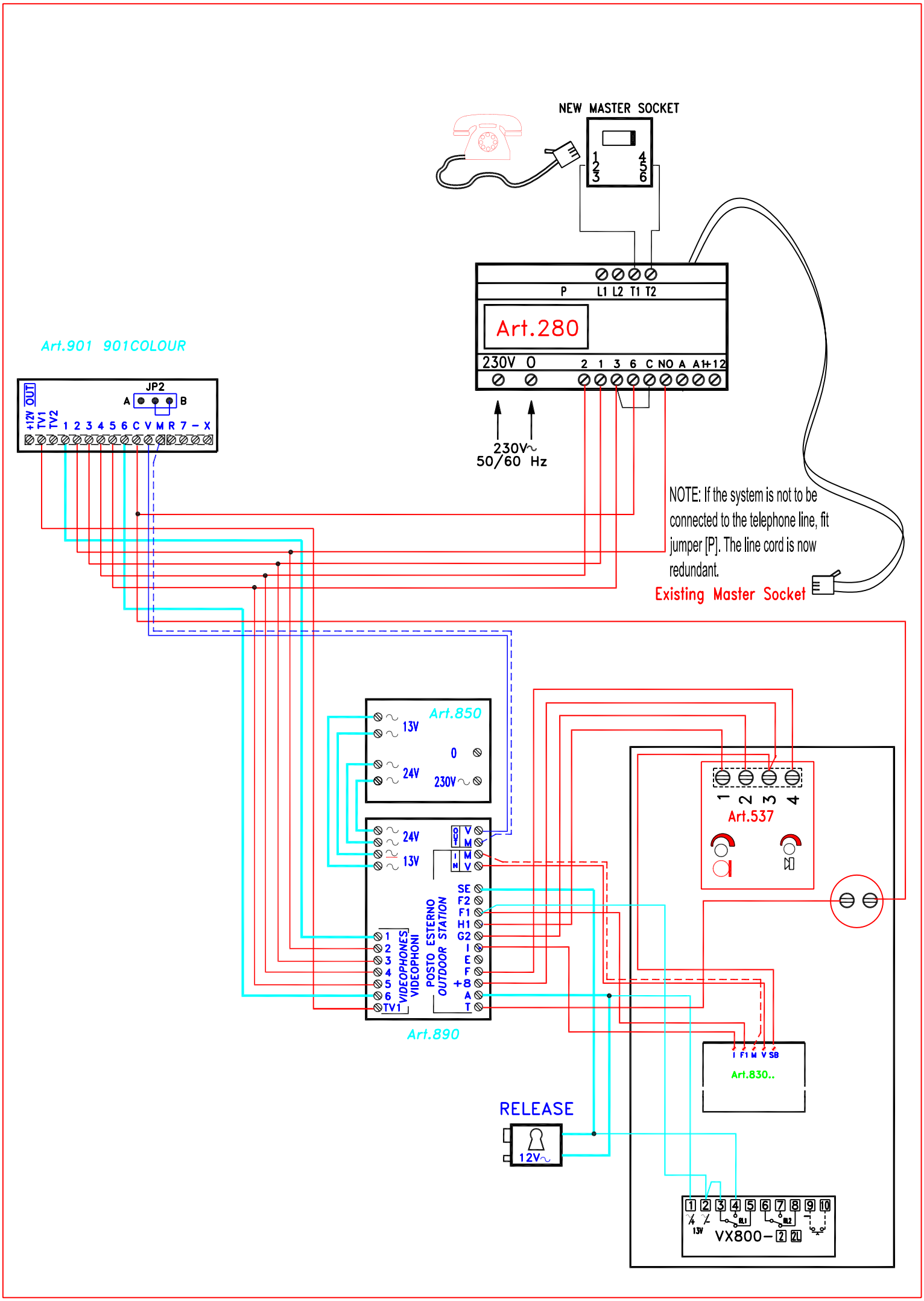
NEW MASTER SOCKET
1 2 3
4 5 6
P
L1 L2 T1 T2
Art.280
230V 0
2 1 3 6 C NO A A1+12
230V~
50/60 Hz
Art.901 901COLOUR
JP2
A B
OUT
+12V TV1 TV2
1 2 3 4 5 6 C V M R 7 – X
NOTE: If the system is not to be connected to the telephone line, fit jumper [P]. The line cord is now redundant.
Existing Master Socket
Art.850
13V
24V
0
230V~
24V
13V
OUT V M
IN M V
SE
F2
F1
H1
G2
I
E
F
+8
A
T
1 2 3 4 5 6 TV1
VIDEOPHONES
VIDEOPHONI
POSTO ESTERNO
OUTDOOR STATION
Art.890
1 2 3 4
Art.537
I F1 M V SB
Art.830..
RELEASE
12V~
1 2 3 4 5 6 7 8 9 10
13V
RL1
RL2
VX800–2 2L