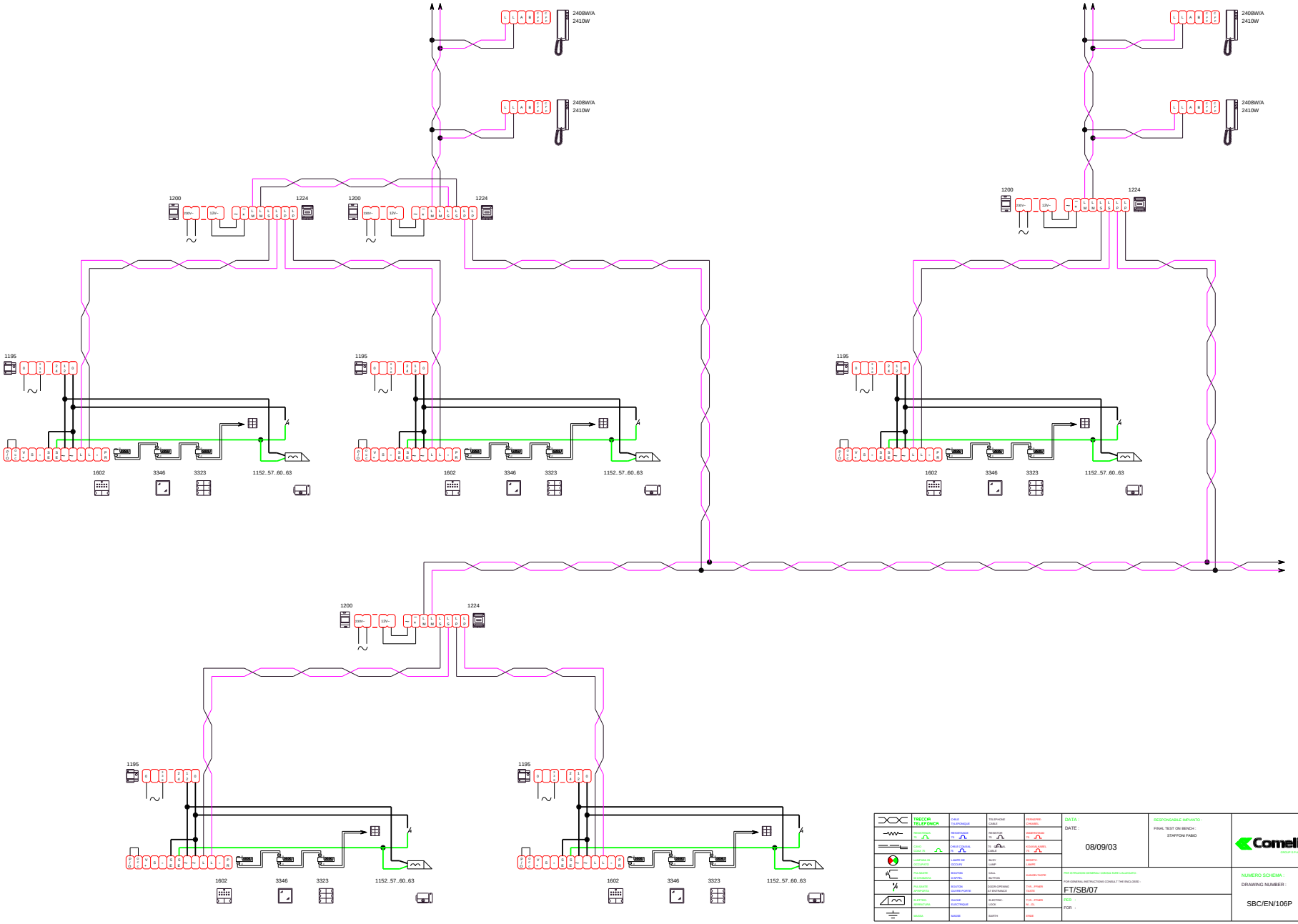

	TRECCIA TELEFONICA	CABLE TELEPHONIQUE	TELEPHONE CABLE	PERNOPRE-CHANNEL
	RESISTENZA TS	RESISTANCE TS	RESISTOR TS	WIDERSTAND TS
	CAVO COAX TS	CABLE COAXIAL TS	TS CABLE	KOAXIALKABEL TS
	LAMPADA DI OCCUPATO	LAMPE DE OCCUPE	BUSY LAMP	BESETZ-LAMPE
	PULSANTE DI CHIAMATA	BOUTON D'APPEL	CALL BUTTON	KLINGELTASTE
	PULSANTE APRIPORTA	BOUTON OUVRE-PORTE	DOOR-OPENING AT ENTRANCE	TYR. JYNAR TASTE
	ELETTRO SERRATURA	GACHE ELECTRIQUE	ELECTRIC-LOCK	TYR. JYNAR M. -EL
	MASSA	MASSE	EARTH	ERDE

DATA :
DATE :
08/09/03

RESPONSABILE IMPIANTO :
FINAL TEST ON BENCH :
STAFFONI FABIO

Comelit
GROUP S.P.A.

PER ISTRUZIONI GENERALI CONSULTARE LA LAVAGLIATA :
FOR GENERAL INSTRUCTIONS CONSULT THE ENCLOSED :
FT/SB/07

PER :
FOR :

NUMERO SCHEMA :
DRAWING NUMBER :
SBC/EN/106P