Issue Date: 06/03/2014

ASD276

True Day/Night 27x Vandal Resistant PTZ Dome

ASD276

DATASHEET

Key Features

- 1/4" Sony Super HAD CCD
- Vandal Resistant Housing
- 27x Optical Zoom Options 16x Digital Zoom
- Super High Resolution (550 TVL)
- High Accuracy with Micro-Stepping Control Technology
- Low Noise & Vibration
- Digital Noise Reduction
- HLC (Highlight Compensation)
- OSD Menu
- D.I.S. (Digital Image Stabilisation)
- 128 Presets
- 4 Patterns, 8 Swings, 8 Group Functions
- Privacy Zones (8)
- Endless 360º Pan Rotation
- Motion Detection
- Auto Flip, Auto Parking
- Sensor In/Out
- Built-In Fan & Heater
- AC24V
- IP66

www.geniecctv.com
sales@geniecctv.com
T: +44 (0) 1707 330 541
F: +44 (0) 1707 330 543

Genie CCTV Ltd.
CCTV House, City Park,
Watchmead,
Welwyn Garden City,
Hertfordshire,
AL7 1LT,
United Kingdom

Genie CCTV

DATASHEET

Technical Specification

Model Number	ASD276
Image Sensor	1/4” Sony HAD CCD
Optical Zoom Ratio	27x
Digital Zoom	16x
Horizontal Resolution	550 TVL (Colour) / 680 TVL (Mono)
Scanning System	2:1 Interlaced
Effective Pixels (H x V)	752 x 582
Video Format	PAL
Frequency	Horizontal: 15.625KHz, Vertical: 50Hz
Focal Length	F1.6~2.9 f=3.5 (Wide) ~ 94.5 (Tele) mm
Angle of View	H: 55.5ºC (Wide) ~ 2.24º (Tele) V: 42.5º (Wide) ~ 1.79º (Tele)
Shutter Speed / Zoom Speed	x512 ~ 1/120000 Sec / 1.8 Sec
Sensitivity (Based on 50 IRE)	0.4 Lux Colour 0.02 Lux B&W (0.002 Lux with Sens-Up ON)
S/N Ratio	>50dB (AGC Off)
Day / Night	Auto / Day / Night (IR Cut Filter)
Focus	Auto / Manual / Semi-Auto
On Screen Display (OSD)	Menu / PTZ Information, etc
Digital Noise Reduction	Low / Middle / High / Off
White Balance	Auto / Manual (Red & Blue Gain Adjustable)
Automatic Gain Control	Low / Middle / High / Off
Backlight Compensation	BLC / HLC / Off
Privacy Zones	On/Off – 8 Programmable Privacy Zones
Presets	128 with Label, Camera Image Setting
Pattern	4 (Approximately 5 Minutes for Each Pattern)
Group / Swing	Group: 8 (20 Action Entries per Group) Swing: 8
Other Functions	Auto Flip, Auto Parking, Power Up Action
Range	Pan: 360º (Endless) Tilt: 90º
Pan/Tilt Speed	Preset: 360º / Sec Manual: 0.05 ~ 360º/Sec (Proportional to Zoom) Swing: 1 ~ 180º/Sec
Communication	RS-485
Protocols	Pelco-D, Pelco-P Selectable
Sensor In / Alarm Out	Built-In 3 Inputs (Photo Coupler Type) / 1 Output (Relay Type)
Fan & Heater	Fan (Built-In) : Always On Heater: Switches On Below Internal Temperature of 10ºC/50ºF
Power Supply	AC24V
Power Consumption	1.5A
Dimensions	Dome: ø150 mm, 296 × 276.6mm (With Wall Bracket) ø192×265.3mm (With Ceiling Mount)
Operating Conditions	Temperature: -30°C ~ 50°C (Heater ON) 0°C ~ 40°C (Heater OFF) Humidity: Max 90% RH
IP Rating	IP66
Weight	3kg (Without Bracket)

Features and specifications are subject to change for further improvement without any notice

www.geniecctv.com
sales@geniecctv.com
T: +44 (0) 1707 330 541
F: +44 (0) 1707 330 543

Genie CCTV Ltd.
CCTV House, City Park,
Watchmead,
Welwyn Garden City,
Hertfordshire,
AL7 1LT,
United Kingdom

DATASHEET

Dimensions (mm)

Main Body

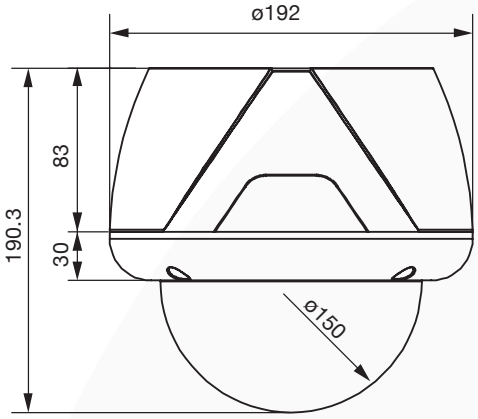

Ceiling Mount

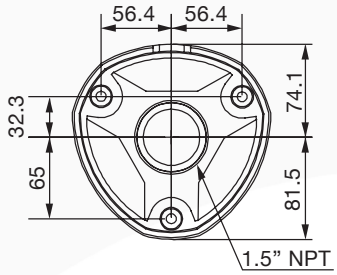

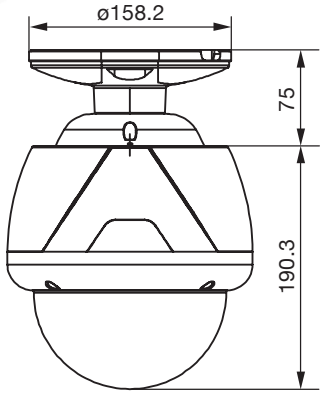

Wall Mount

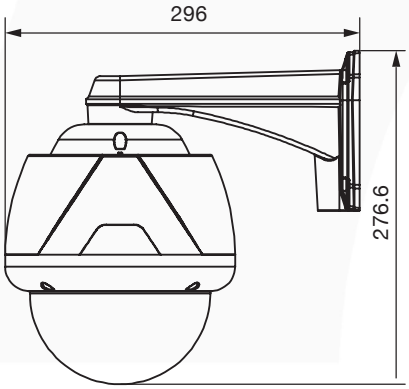

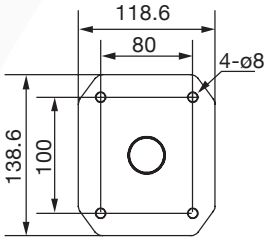

Accessories

- ASDCMB - Ceiling Mount Bracket for ASD PTZ Domes
- ASDCOMB - Corner Mount Bracket for ASD PTZ Domes
- ASDPMB - Pole Mount Bracket for ASD PTZ Domes
- ASDSWAN/P - Swan Mount Bracket for ASD PTZ Domes
- KB-5451 - Mini Keyboard Controller
- KB-5451/JS - Keyboard Controller with Joystick
- KB-1000/JS - Keyboard Controller with Joystick

www.geniecctv.com
sales@geniecctv.com
T: +44 (0) 1707 330 541
F: +44 (0) 1707 330 543

Genie CCTV Ltd.
CCTV House, City Park,
Watchmead,
Welwyn Garden City,
Hertfordshire,
AL7 1LT,
United Kingdom