Securitron® M32 Magnalock®

600 lbs holding force direct mounted Magnalock

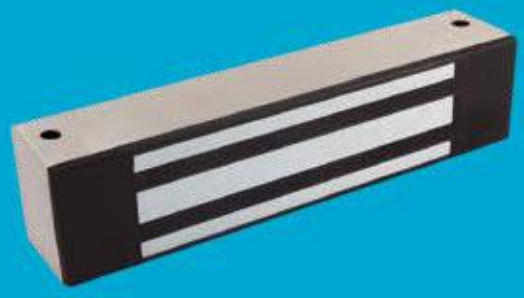

The ultimate in Magnalock reliability for indoor/outdoor traffic control.

The M32 electromagnetic lock is ideal for traffic control in high-use areas within secured or monitored perimeters. With unsurpassed durability, the M32 will last long after most buildings wear out. Applications include storage areas, rooms, and hallways where reliability, high durability and low-maintenance are required.

Features

Standard Features

- PoE friendly
- Sustainability documentation
- Efficient, low power usage
- Automatic dual-voltage—no field adjustment required
- Fully sealed for weatherproof operations
- Size optimized for use with door closers
- Rust resistant—all ferrous metal surfaces plated for durability
- Instant release circuit—no residual magnetism
- Noise suppression with included MOV
- 10 ft [3.05m] of jacketed, stranded conductor cable
- Ultra-secure collapsing blind nuts mount to door frame for strength and reliability
- MagnaCare® lifetime replacement, no fault, no questions asked warranty

Optional Features

- **F** Face drilled
- **B** Patented BondSTAT magnetic bond sensor
- **D** Integrated Door Position Switch (DPS)
- **SS** Split Strike

Grade 3 | MagnaCare Warranty | Auto Sensing Dual Voltage 12/24 | PoE Friendly | Fire Rated | Outdoor Rated | Preload

Dimensions

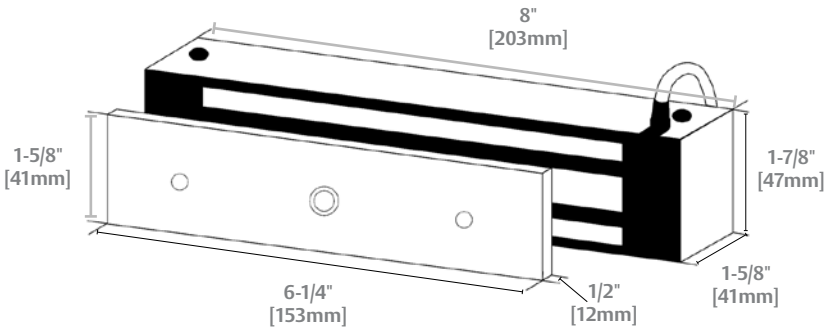

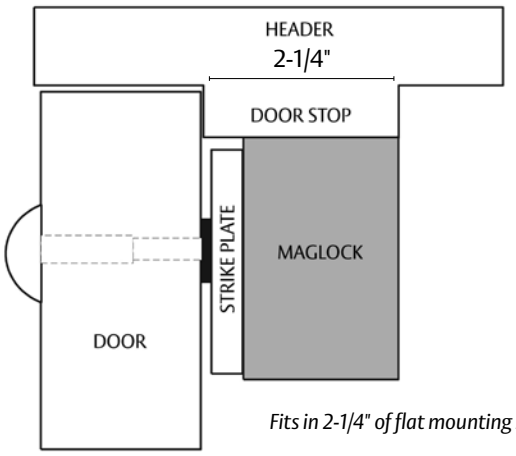

Fits in 2-1/4" of flat mounting space

Specifications

Certifications

- UL 10C Listed
- CAN4-S104, CAN/ULC-S533 Listed
- ANSI/UL 294 Listed
- CSA-C22.2 No.205 Listed
- ANSI/BHMA A156.23, Grade 3; E08501-500
- CSFM—California State Fire Marshal Approved
- CE:EN 50081-1(92), EN 61000-6-2(99) Approved
- Environmental Product Declaration
- Health Product Declaration

Dimensions

- **Magnalock:** 8"L x 1-5/8"D x 1-7/8"H
- **Strike:** 6-1/4"L x 1/2"D x 1-5/8"H

Electrical

- 300 mA at 12 VDC
- 150 mA at 24 VDC

Holding Force

- 600 lbs [272kg]

Operating Temperature

- -40 to +140F [-40 to +60C]
- Indoor or Outdoor use

Shipping Weight

- 6 lbs [2.72kg]

How to Order

Model Series	Mounting Method	Monitoring Options	Strike Plate Options
M32	**FG**	**BD**	**– SS**
M32 600 lbs	**(blank)** Direct Mount	**(blank)** No Monitoring	**(blank)** Standard Strike
	F Face Drilled	**B** BondStat Monitor	**SS** Split Strike
	G Gate Conduit (M62/M82 only)	**D** Door Position Switch	**SASM** Shock Absorbing Strike Mount
		BD BondStat and DPS	