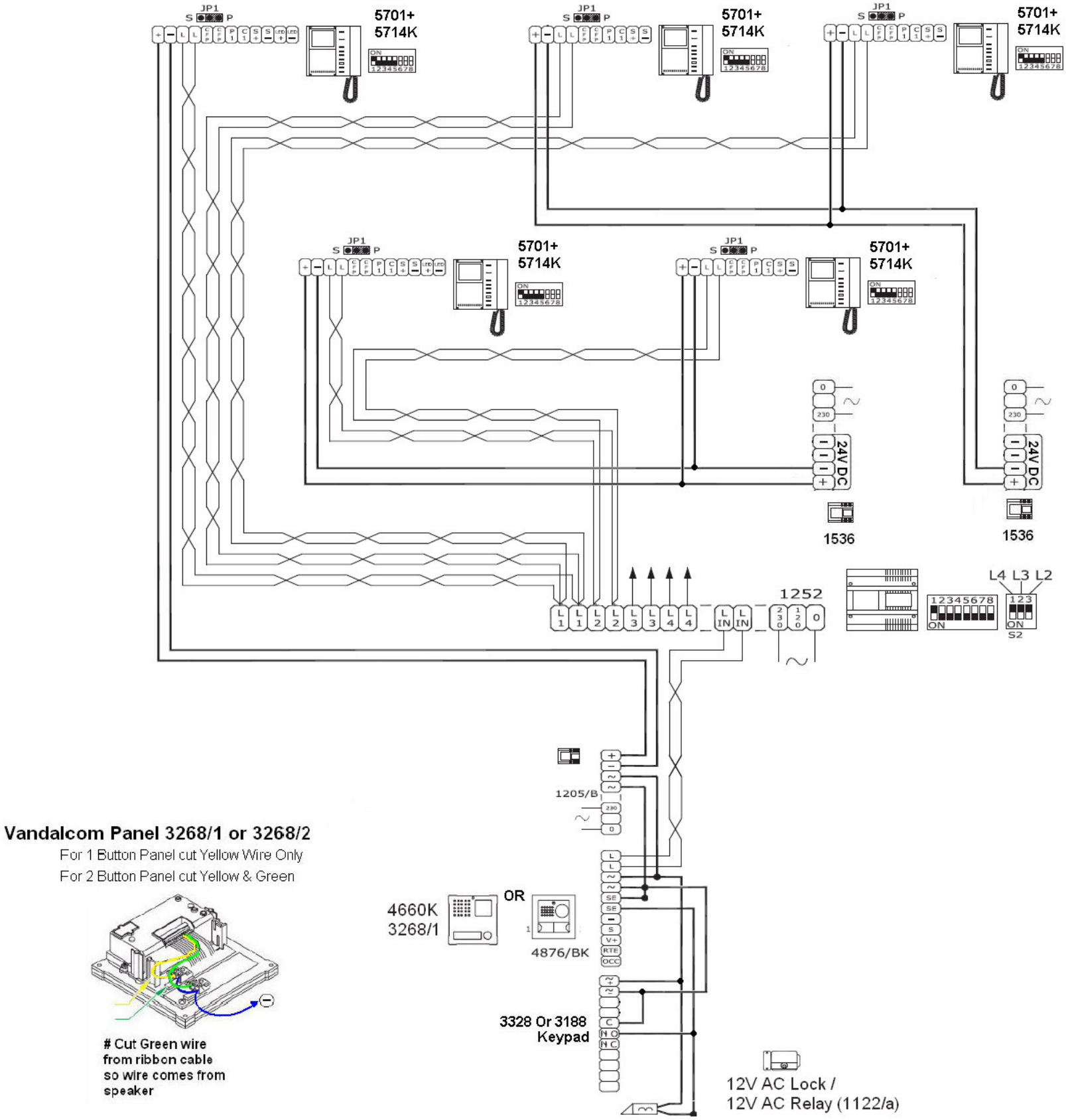
JP1
S P
5701+
5714K
ON
12345678
24V DC
1536
1252
L4 L3 L2
S2
1205/B
4660K
3268/1
OR
4876/BK
3328 Or 3188
Keypad
12V AC Lock /
12V AC Relay (1122/a)
Vandalcom Panel 3268/1 or 3268/2
For 1 Button Panel cut Yellow Wire Only
For 2 Button Panel cut Yellow & Green
Cut Green wire
from ribbon cable
so wire comes from
speaker