NOTE:
THIS DRAWING INDICATES AND ASSUMES THE USE OF
BPT COMPOSITE CABLES OR A SUITABLE EQUIVALENT.

ENSURE ALL ADDITIONAL CONNECTIONS ARE
A MINIMUM OF 0.5MM CSA PER CORE.

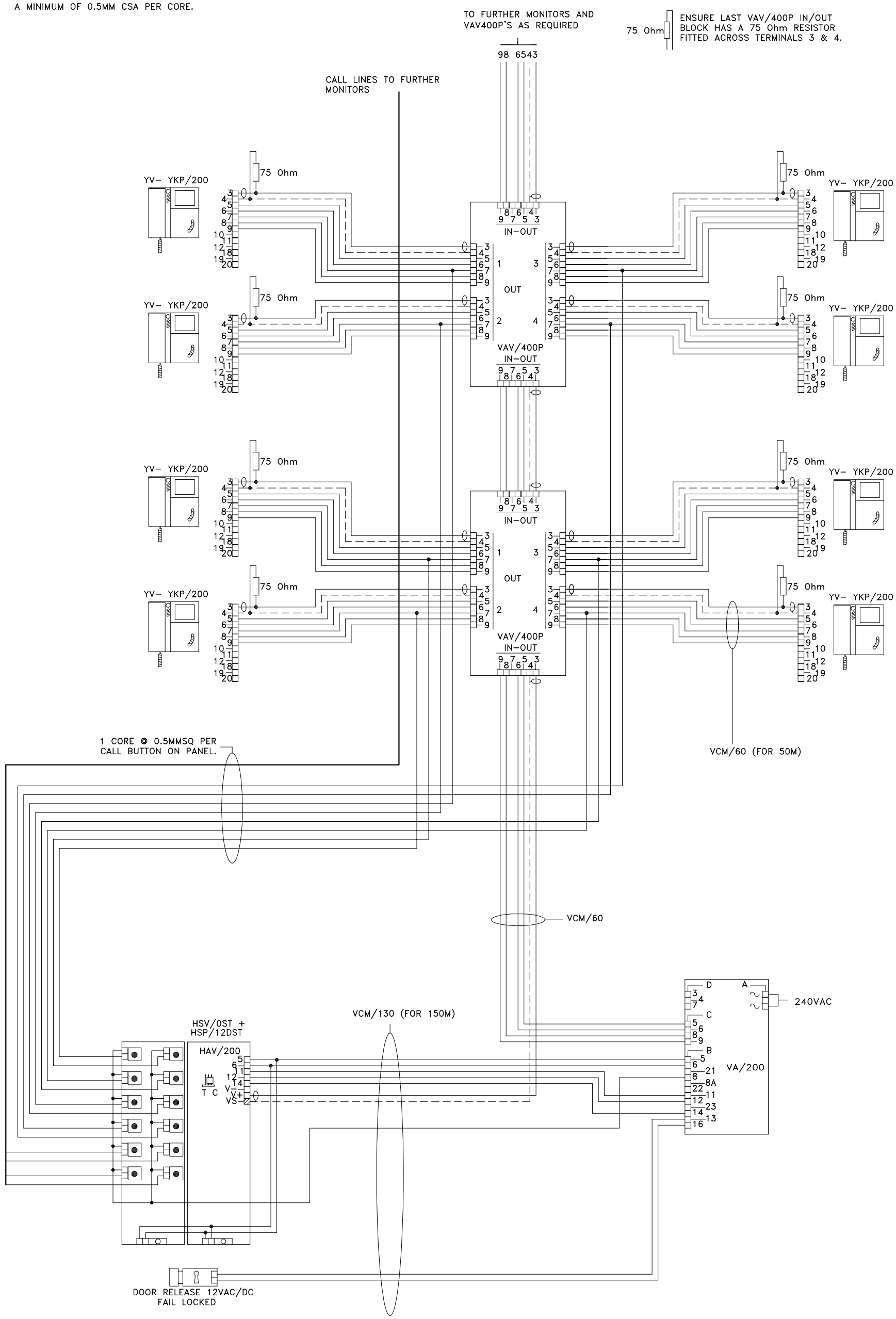

NOTE; CABLE EQUIVALENTS

VCM/130 = RG59 COAX + 4 CORES @ 1.0MMSQ + 8 CORES @ 0.5MMSQ

VCM/60 = RG59 COAX + 2 CORES @ 1.0MMSQ + 3 CORES @ 0.5MMSQ

BPT (UK) LTD. HERTS. ENGLAND	PREPARED FOR INSTALLER INFORMATION	DATE: 17/03/04	DRAWN: RC
		REVISED:	
DRAWING TITLE:	1 X MULTI-BUTTON TARGHA VIDEO ENTRY PANEL & LYNEA MONOCHROME MONITORS	DRAWING No: B-NT1YNL	